丝杆轴端形状Screw end forms

类型 31-32 Form 31-32

端部支撑 Supported end

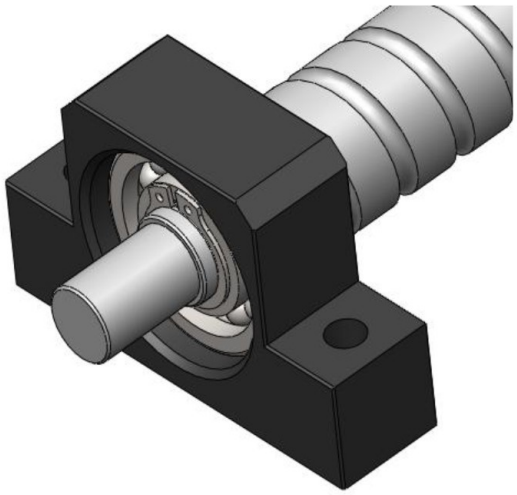

类型 Form	滚珠丝杠规格 Ball screw size		L1	D1		L2	D2 h7	L3 +0.2	D3 h11	G H13
	d_0	P								
31	8	2.5	9	6	-0.005 / -0.012	8	4	6.8	5.7	0.8
	8	2.5	9	6	-0.005 / -0.012	8	4	6.8	5.7	0.8
	12	4/5/10	10	8	-0.005 / -0.012	9	6	7.9	7.6	0.9
	16	4/5/10/16	11	10	-0.005 / -0.012	15	8	9.15	9.6	1.15
	20	4/5/10/20	13	15	-0.005 / -0.014	15	10	10.15	14.3	1.15
	20	4/5/10/20	16	17	-0.005 / -0.014	20	12	13.15	16.2	1.15
	25	4/5/10/25	19	20	-0.005 / -0.014	23	15	15.35	19	1.35
	32	5/10/20/32	20	25	-0.005 / -0.014	25	17	16.35	23.9	1.35
	40	5/10/20/40	21	30	-0.005 / -0.015	30	20	17.75	28.6	1.75
	40	5/10/20/40	22	35	-0.005 / -0.015	38	25	18.75	33	1.75
	50	5/10/12/20/40	23	40	-0.005 / -0.015	50	35	19.75	39	1.95
32	20	4/5/10/20	13	15	-0.005 / -0.014	15	10	10.15	14.3	1.15
	20	4/5/10/20	16	17	-0.005 / -0.014	20	12	13.15	16.2	1.15
	25	4/5/10/25	19	20	-0.005 / -0.014	23	15	15.35	19	1.35
	32	5/10/20/32	20	25	-0.005 / -0.014	25	17	16.35	23.9	1.35
	40	5/10/20/40	21	30	-0.005 / -0.015	30	20	17.75	28.6	1.75
	40	5/10/20/40	22	35	-0.005 / -0.015	38	25	18.75	33	1.75
	50	5/10/12/20/40	23	40	-0.005 / -0.015	50	35	19.75	39	1.95

支撑座剖视图Application

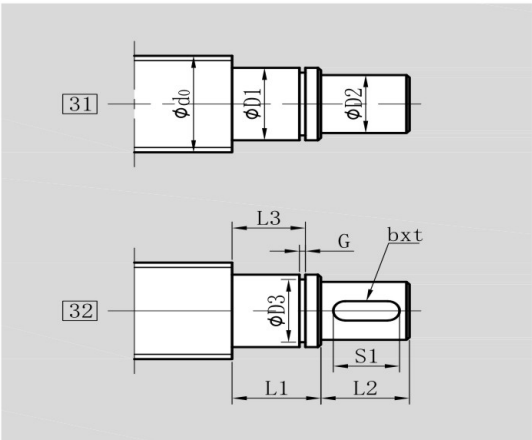

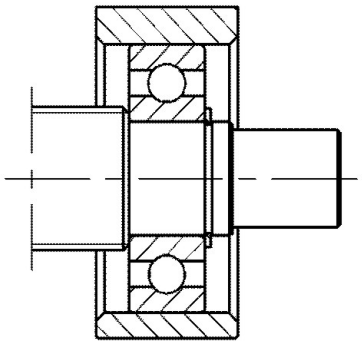

单位Unit：mm

滚珠丝杠规格		键槽			支撑座型号			
Ball screw size		Keyway			End support block			
d_0	P	S1	b P9	t +0.1	FF型	EF型	BF型	AF型
8	2.5	–	–	–	FF06	EF06	–	–
8	2.5	–	–	–	–	EF08	–	–
12	4/5/10	–	–	–	FF10	EF10	BF10	AF10
16	4/5/10/16	–	–	–	FF12	EF12	BF12	AF12
20	4/5/10/20	–	–	–	FF15	EF15	BF15	AF15
20	4/5/10/20	–	–	–	FF17	–	BF17	–
25	4/5/10/25	–	–	–	FF20	EF20	–	AF20
32	5/10/20/32	–	–	–	FF25	–	BF25	–
40	5/10/20/40	–	–	–	FF30	–	BF30	–
40	5/10/20/40	–	–	–		–	BF35	–
50	5/10/12/20/40	–	–	–	–	–	BF40	–
20	4/5/10/20	12	3	1.8	FF15	EF15	BF15	AF15
20	4/5/10/20	17	4	2.5	FF17	–	BF17	–
25	4/5/10/25	20	5	3	FF20	EF20	–	AF20
32	5/10/20/32	21	5	3	FF25	–	BF25	–
40	5/10/20/40	25	5	3	FF30	–	BF30	–
40	5/10/20/40	30	8	4		–	BF35	–
50	5/10/12/20/40	40	8	4	–	–	BF40	–